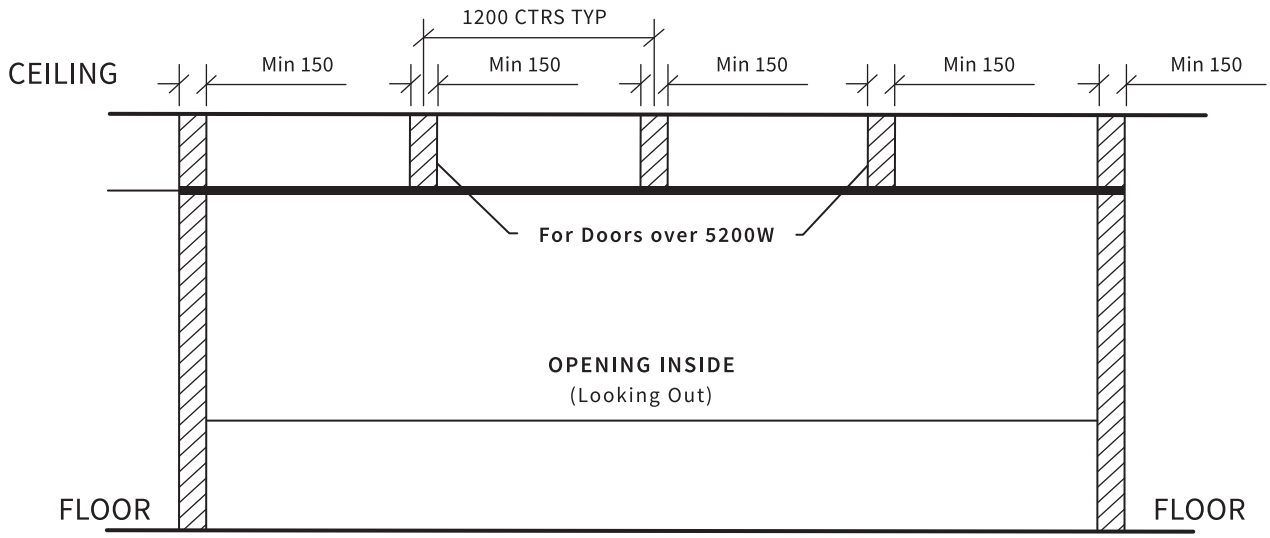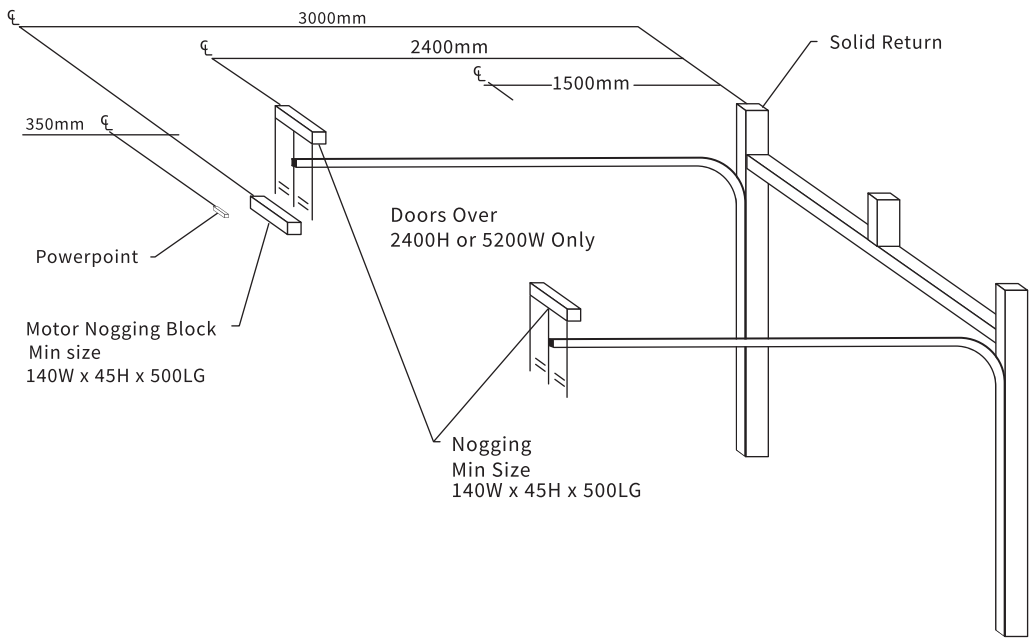NOGGIN PLACEMENT SECTIONAL UP TO 2500H